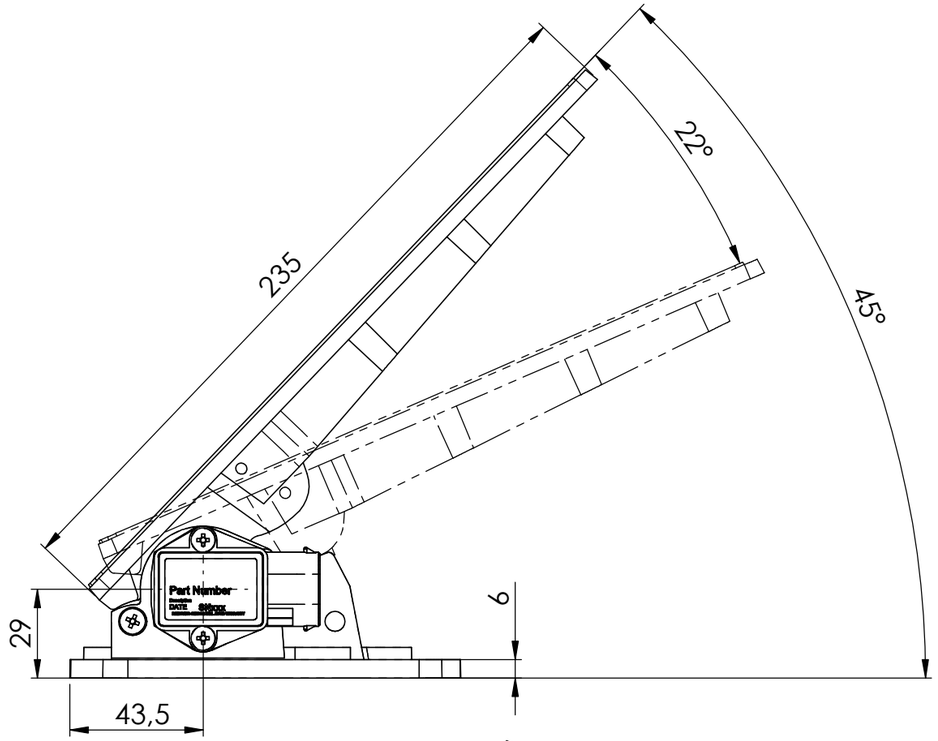

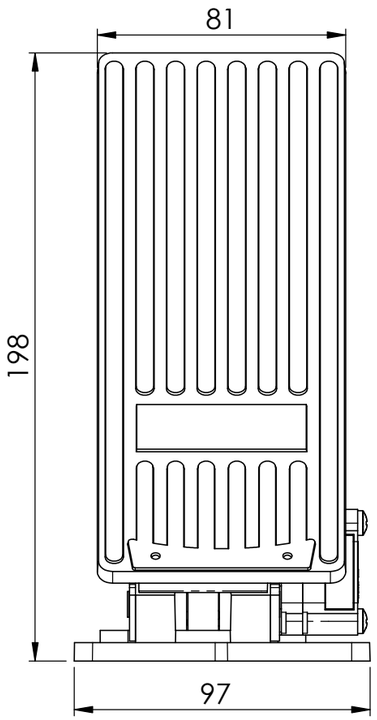

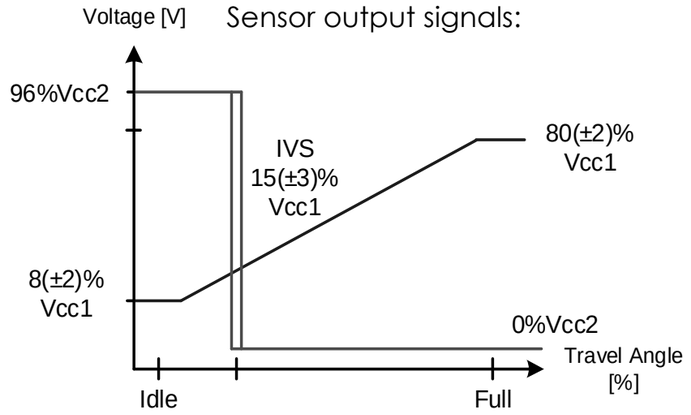

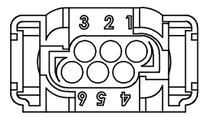

Wire side view

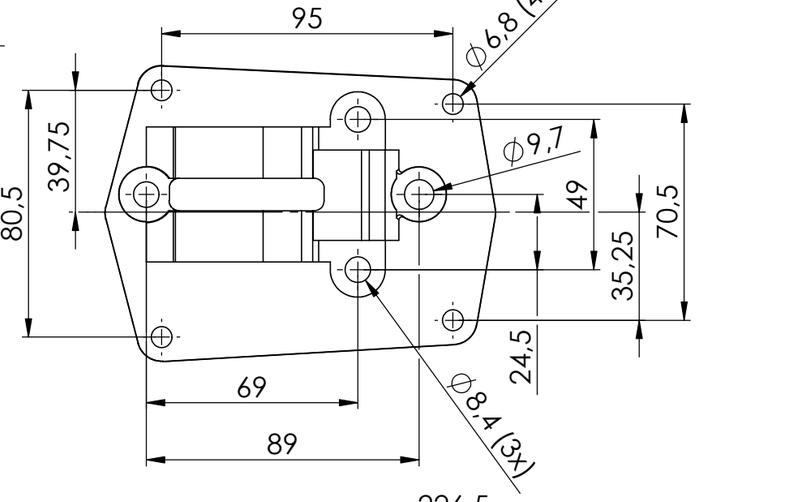

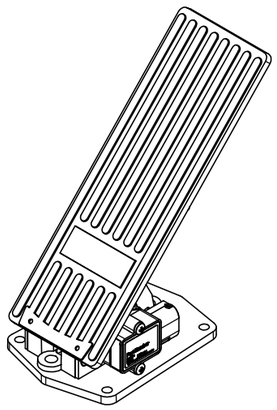

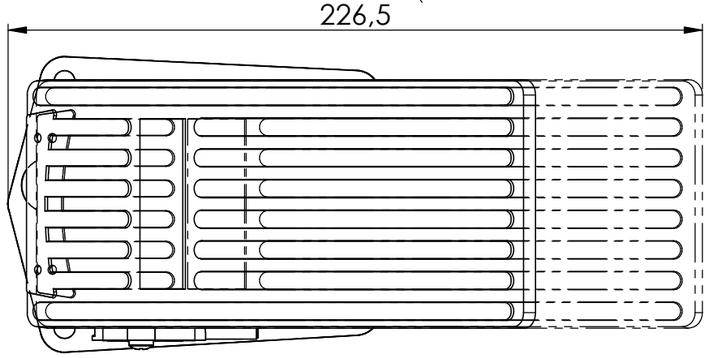

	FUNCTION	PIN N°
SIGNAL 1	Ana Vcc1 Supply +5V (+/-0,25V)	1
	Ana Ground 0V	2
	Ana Signal 8 - 80%Vcc1	4
SIGNAL 2	IVS Vcc2 Supply +5V (+/-0,25V)	6
	IVS Ground 0V	5
	IVS Signal (High-Low) at 15%Vcc1	3

Connector : AMP Nr. 1-967616-1
Terminals : AMP Nr. 0-0962885-5
Wire seal : AMP Nr. 0-0967067-1

Not Included

!!! WARNING !!!
Connect throttle sensor ground to engine ECU ground terminals only.
DO NOT CONNECT TO CHASSIS GROUND

UNLESS OTHERWISE SPECIFIED:
DIMENSIONS ARE IN mm
TOLERANCES:
ISO 2768 - vL

TITLE:
Throttle Pedal 45°
Ana + IVS

	NAME	CREATED DATE
DRAWN	JST	28/03/2023
CHK'D	RD	REV. DATE 28/03/2023

MCS MOBILE CONTROL SYSTEMS SA

This drawing is confidential and remains the sole proprety of Mobile Control Systems S.A. This document is protected in accordance with the prevailing law.

PART NR:
962 145 M306

REV: **A**

SCALE:1:2

SHEET 1 OF 1

A3